METAL OXIDE RESISTOR – MOR1/2/3

FEATURES

- Metal oxide film technology
- High pulse loading capability
- High stability, reliability and uniformity characteristics
- High temperature coating
- Non-flammable
- Small size
- Various forming styles are available
- Various packaging and taping configurations

QUICK REFERENCE DATA

DESCRIPTION	MOR1	MOR2	MOR3
Resistance range	0.22 Ω - 1 MΩ	0.33 Ω - 1 MΩ	0.33 Ω - 1 MΩ
Tolerance and series	±5%, E24	±5%, E24	±5%, E24
Maximum dissipation at T_{amb} = 70 °C	1 W	2 W	3 W
Limiting voltage (DC or RMS)	350 V	350 V	500 V
Temperature coefficient	±350 ppm/°C		
Operating temperature	- 55 °C to + 155 °C		
Basic specification	IEC60115-1 and 60115-2		
Climatic category (IEC 60068)	55/155/56		
Stability $\Delta R/R_{max}$ after:			
Load	±5.0% +0.1Ω		
Climatic tests	±3.0% +0.1Ω		
Resistance to soldering heat	±1.0%+0.05Ω		

TECHNOLOGY

Ohmic values between 6.2 Ω and 150 kΩ have a homogeneous metal oxide film alloy is deposited on a high-grade ceramic body. Values < 6.2 Ω and values > 150 kΩ have a homogeneous film of metal. After a helical groove has been cut in the resistive layer, tinned connecting wires of electrolytic copper or copper-clad iron are welded to the end-caps. The resistors are coated with a green, non-flammable lacquer, which provides electrical, mechanical and climatic protection. The coating is resistant to all cleaning solvents in accordance with MIL-STD-202, method 215 and IEC 60068-2-45.

© PHOENIX DO BRASIL LTDA
All rights are reserved. Reproduction whole or in part is prohibited without the written consent of the copyright owner.

MECHANICAL DATA

AXIAL STYLE

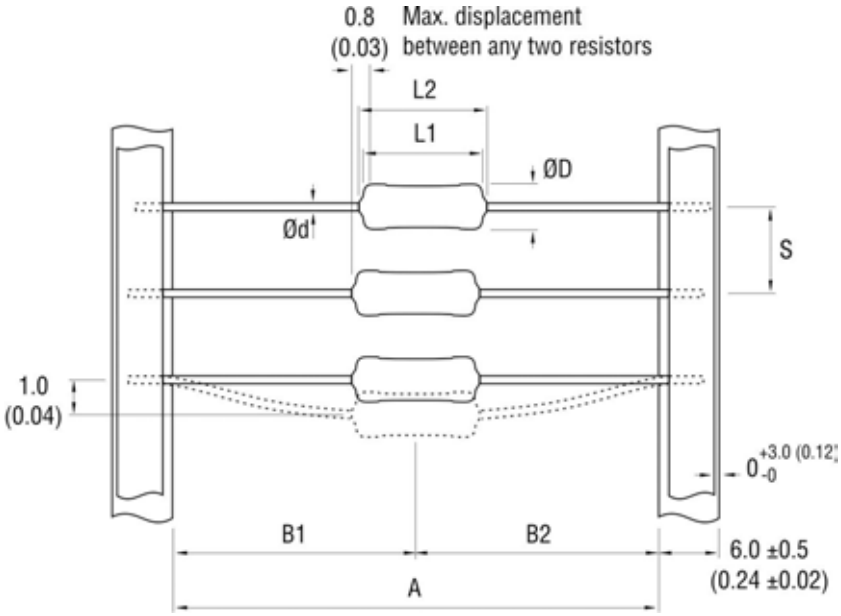

Fig. 1

Table 1. Mechanical data.

PRODUCT	L1 max.	L2 max.	ØD max.	Ød	A	|B1 - B2| max.	S	WEIGHT gr/100 pcs
MOR1	6.5 (0.26)	8.5 (0.34)	2.5 (0.10)	0.58 ±0.05 (0.023 ±0.002)	52.5 ±1.5 (2.07 ±0.06)	1.2 (0.05)	5.0 ±0.1 (0.20 ±0.01)	23.0
MOR2	10.0 (0.40)	12.0 (0.47)	4.1 (0.17)	0.80 ±0.03 (0.031 ±0.001)	52.5 ±1.5 (2.07 ±0.06)			55.0
MOR3	16.7 (0.66)	19.5 (0.77)	5.2 (0.21)	0.80 ±0.03 (0.031 ±0.001)	63.0 ±1.5 (2.48 ±0.06)		10.0 ±0.1 (0.40 ±0.01)	103.0

Dimension unless specified in mm (inches)

MOUNTING

The resistors are suitable for processing on automatic insertion equipment, cutting and bending machines.

© PHOENIX DO BRASIL LTDA
All rights are reserved. Reproduction whole or in part is prohibited without the written consent of the copyright owner.

ELECTRICAL CHARACTERISTICS

DERATING

The power that the resistor can dissipate depends on the operating temperature.

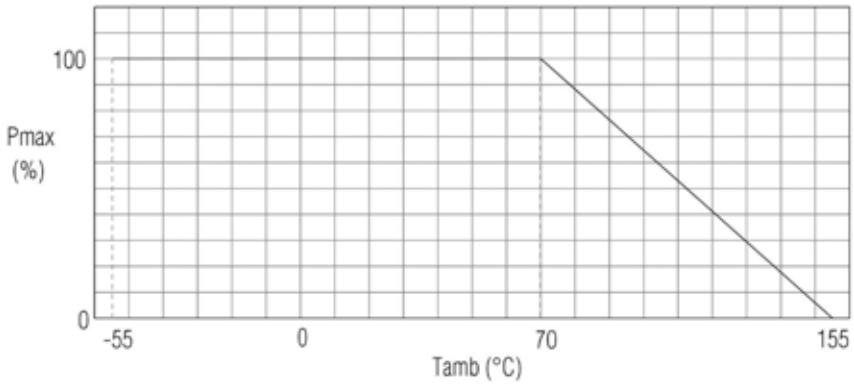

Fig. 2. Maximum dissipation (P_{max}) in percentage of rated power as a function of ambient temperature (T_{amb})

MARKING

The nominal resistance and tolerance are marked on the resistor using four colored bands in accordance with IEC publication 60062 “color code for fixed resistors”. Standard values of nominal resistance are taken from the E24 series. The values of the E24 series are in accordance with IEC publication 60063.

ORDERING INFORMATION

Table 2. Ordering code.

PRODUCT	TOLERANCE	ORDERING CODE	TAPING	LEAD ∅	PACKAGING	QUANTITY (pcs)
MOR1	±5%	**2306 161 13XXX**	52.5 (2.07)	0.58 Cu (0.023)	AMMOPACK	1000
		2306 161 33XXX			AMMOPACK	5000
		2306 161 23XXX			REEL	5000
MOR2	±5%	**2306 162 13XXX**	52.5 (2.07)	0.80 Cu (0.031)	AMMOPACK	1000
		2306 162 23XXX			REEL	5000
MOR3	±5%	**2306 163 13XXX**	63.0 (2.48)	0.80 Cu (0.031)	AMMOPACK	500

Dimensions unless specified in mm (inches)
Check ”***Formed leads***” specification to see related part-numbers

© PHOENIX DO BRASIL LTDA
All rights are reserved. Reproduction whole or in part is prohibited without the written consent of the copyright owner.

Table 3. Last digit of ordering code.

RESISTANCE DECADE	LAST DIGIT
0.22 - 0.91 Ω	7
1 - 9.1 Ω	8
10 - 91 Ω	9
100 - 910 Ω	1
1 - 9.1 kΩ	2
10 - 91 kΩ	3
100 - 910 kΩ	4
1 - 9.1 MΩ	5
1 MΩ	6

The resistors have a 12 digit ordering code starting with 2306. The next 5 digits indicate the resistor type and packaging, see table 2.
The last 3 digits indicate the resistance value:
- The first 2 digits of these last 3 indicate the actual resistance value;
- The last digit indicates the resistance decade in accordance with table 3.

Example:
MOR1, 750 Ω, ±5%, ammopack 5000 pcs is **2306 161 33751.**

NAFTA ORDERING INFORMATION

Table 4. NAFTA ordering code.

PRODUCT	TOLERANCE	NAFTA ORDERING CODE	TAPING	LEAD ∅	PACKAGING	QUANTITY (pcs)
MOR1	±5%	**5073MOxxxxxJA8AFX**	52.5 (2.07)	0.58 Cu (0.023)	AMMOPACK	1000
		5073MOxxxxxJ18AFX			AMMOPACK	5000
		5073MOxxxxxJ12AFX			REEL	5000
MOR2	±5%	**5083MOxxxxxJA8AFX**	52.5 (2.07)	0.80 Cu (0.031)	AMMOPACK	1000
		5083MOxxxxxJ12AFX			REEL	5000
MOR3	±5%	**5093MOxxxxxJA8AFX**	63.0 (2.48)	0.80 Cu (0.031)	AMMOPACK	500

Dimensions unless specified in mm (inches)

Table 5. Examples of the ohmic value.

VALUE	5 DIGITS
1 Ω	1R000
10 Ω	10R00
100 Ω	100R0
1 kΩ	1K000
10 kΩ	10K00
100 kΩ	100K0
1 MΩ	1M000

The ohmic value in the NAFTA ordering code (see table 4) is represented by the “xxxxx” in the middle of the above ordering code. Table 5 gives some examples on how to use these 5 digits.

Example:
MOR1, 1000Ω, ±5%, ammopack 5000 pcs is **5093MO1K000J18AFX**

© PHOENIX DO BRASIL LTDA
All rights are reserved. Reproduction whole or in part is prohibited without the written consent of the copyright owner.

TAPE IN AMMOPACK

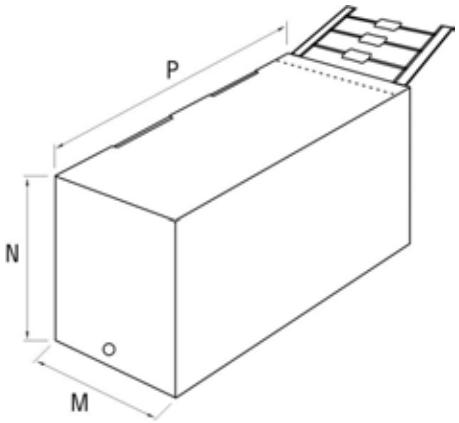

Table 6. Ammopack.

PRODUCT	TAPING	M	N	P	QUANTITY (pcs)
MOR1	52.5 ±1.5 (2.07 ±0.06)	82 (3.3)	28 (1.2)	262 (10.4)	1000
	52.5 ±1.5 (2.07 ±0.06)	78 (3.1)	100 (4.0)	260 (10.3)	5000
MOR2	52.5 ±1.5 (2.07 ±0.06)	78 (3.1)	60 (2.4)	262 (10.4)	1000
MOR3	63.0 ±1.5 (2.48 ±0.06)	86 (3.4)	66 (2.6)	260 (10.3)	500

Dimensions unless specified in mm (inches)

TAPE ON REEL

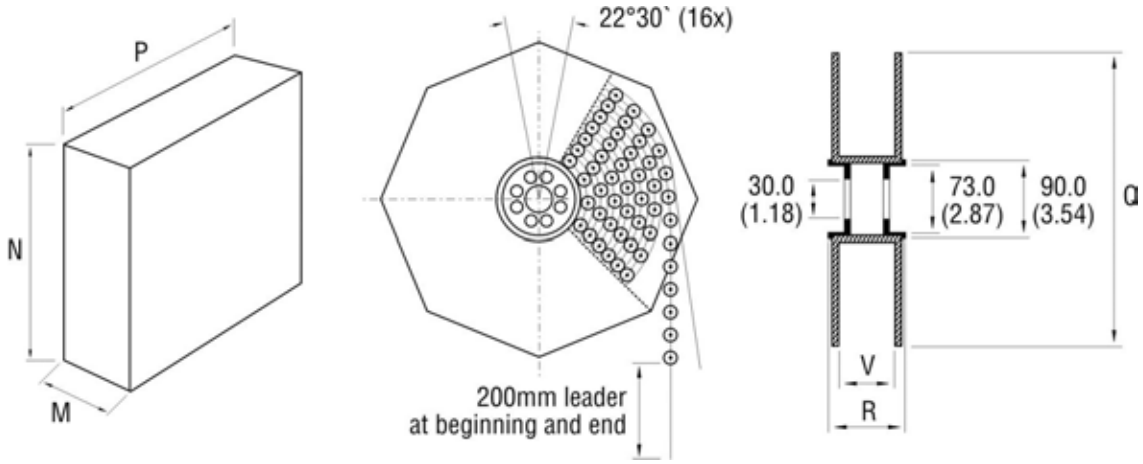

Table 7. Reel.

PRODUCT	TAPING	M	N	P	Q	V	R	QUANTITY (pcs)
MOR1	52.5 ±1.5 (2.07 ±0.06)	92 (3.7)	311 (12.3)	311 (12.3)	305 (12.1)	75 (3.0)	86 (3.4)	5000
MOR2	52.5 ±1.5 (2.07 ±0.06)	92 (3.6)	361 (14.3)	361 (14.3)	355 (14.0)	75 (2.9)	86 (3.4)	5000

Dimensions unless specified in mm (inches)

© PHOENIX DO BRASIL LTDA
All rights are reserved. Reproduction whole or in part is prohibited without the written consent of the copyright owner.

TESTS AND REQUIREMENTS

Essentially all tests are carried out in accordance with the schedule of IEC publications 60115-1, category 55/155/56 (rated temperature range -55 to +155 °C; damp heat, long term, 56 days and along the lines of IEC publications 60068-2); Recommended basic climatic and mechanical robustness testing procedure for electronic components and under standard atmosphere conditions according to IEC 60068-1 subclause 5.3, unless otherwise specified.
In some instances deviations from the IEC recommendations were necessary for our specified method.

Table 8. Test and requirements.

IEC 60115-1 CLAUSE	IEC 60068-2 TEST METHOD	TEST	PROCEDURE	REQUIREMENTS		
				MOR1	MOR2	MOR3
4.6.1.1	-	Insulation resistance	500 V (DC) during 1 minute; V-block method.	$R_{ins\ min}$ 10^4 MΩ		
4.7	-	Voltage proof on insulation	500 V (RMS) during 1 minute, V-block method.	No breakdown or flashover		
4.8	-	Temperature coefficient	Between - 55 °C and + 155 °C	±350 ppm/°C		
4.16	21(U)	Robustness of terminations:		No damage $\Delta R/R_{max}$ ±0.5% +0.05Ω		
4.16.2	21(Ua1)	Tensile all samples	Load 10 N, 10 s			
4.16.3	21(Ub)	Bending half number of samples	Load 5 N, 4 X 90°			
4.16.4	21(Uc)	Torsion other half of samples	3 x 360° in opposite directions			
4.17	20(Ta)	Solderability (after ageing)	16 h at 155 °C; immersed in flux 600, leads immersed 2 mm for 2 ±0.5 s in a solder bath at 235 ±5 °C	Good tinning (≥ 95% covered) No damage		
4.18	20(Tb)	Resistance to soldering heat	Thermal shock: 3 s; 350 ±10 °C; 6 mm from body	$\Delta R/R_{max}$ ±1% +0.05Ω		
4.19	14(Na)	Rapid change of temperature	30 minutes at - 55 °C and 30 minutes at + 155 °C; 5 cycles	No visual damage		
				$\Delta R/R_{max}$ ±1% +0.05Ω		$\Delta R/R_{max}$ ±2% +0.05Ω
4.22	6(Fc)	Vibration	Frequency 10 to 500 Hz, displacement 1.5 mm or acceleration 10 g; three directions; total 6 h (3x2 h)	No damage $\Delta R/R_{max}$ ±0.5% +0.05Ω		

© PHOENIX DO BRASIL LTDA
All rights are reserved. Reproduction whole or in part is prohibited without the written consent of the copyright owner.

IEC 60115-1 CLAUSE	IEC 60068-2 TEST METHOD	TEST	PROCEDURE	REQUIREMENTS		
				MOR1	MOR2	MOR3
4.23		Climatic sequence:		$R_{ins\ min}$ 10^3 MΩ $\Delta R/R_{max}$ ±3% +0.1Ω		
4.23.2	2(Ba)	Dry heat	16 h; 155 °C			
4.23.3	30(Db)	Damp heat (accelerated) 1st cycle	24 h; 25 °C to 55 °C; 90 to 100% RH			
4.23.4	1(Aa)	Cold	2 h; - 55 °C			
4.23.6	30(Db)	Damp heat (accelerated) remaining cycles	5 days; 25 °C to 55 °C; 90to 100% R.H.			
4.24	3(Ca)	Damp heat (steady state)	56 days; 40 °C; 90 to 95% R.H. loaded with 0.01Pn	$R_{ins\ min}$ 10^3 MΩ $\Delta R/R_{max}$ ±3% +0.1Ω		
4.25.1	-	Endurance (at 70 °C)	1000 h loaded with Pn or $V_{max;}$ 1.5 h ON and 0.5 h OFF	$\Delta R/R_{max}$ ±5% +0.1Ω		
4.29	45(Xa)	Component solvent resistance	Isopropyl alcohol followed by brushing in accordance with MIL STD 202	No visible damage		

© PHOENIX DO BRASIL LTDA
All rights are reserved. Reproduction whole or in part is prohibited without the written consent of the copyright owner.